Protec Fire Detection Pty Ltd

6KPNZ/HT/TS - Heat Sensor Plus Talking Sounder

Fire Detection - Addressable

- Ideal Where Smoke Detection is Unsuitable
- Integrated Voice Enhanced Sounder
- Seven Selectable Voice Messages
- Loop Powered
- Low Current
- Programmable Volume Control
- Integral Short Circuit Isolator
- Protec Algo-Tec™ 6000*PLUS* Protocol
- Devices Display Address Number
- FAST™ Addressing
- Reduced False Alarms
- AS 1670 or NZS 4512 Compliant

The Protec Algo-Tec™ 6000*PLUS* sensor range has been developed to incorporate advanced fire sensing technology, electronic sounders, high intensity LED warning beacons and speech enhanced talking sounder capability, all integrated within the sensor head and powered from the loop.

6KPNZ/HT/TS
Interactive addressable heat sensor with low thermal mass thermistor, giving fast response to temperature increases.

The intelligent sensor data is evaluated by the Protec Algo-Tec™ 6000*PLUS* interactive programmable algorithms.
Suitable for applications where smoke detection is unsuitable but require a high sensitivity heat detector. Examples are boiler rooms, kitchens, laundries and ventilated areas.

Sensor Talking Sounder - For the ultimate method of alerting building occupants of the incidence of an emergency, the Protec Algo-Tec™ 6000*PLUS* sensor is equipped with an integrated voice enhanced sounder. The talking sounder is capable of delivering synchronised alert and evacuate messages around a building, removing any ambiguity, particularly for anyone unfamiliar with the building alert and evacuation strategy, enabling a more prompt and safe building evacuation.

Technical Specification

PRODUCT CERTIFICATION
BSI Certified Product
BMP 732591

Dimensions (mm)

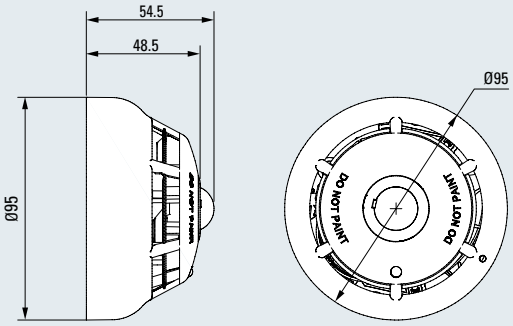

Typical Wiring using 6000*PLUS*/BASE

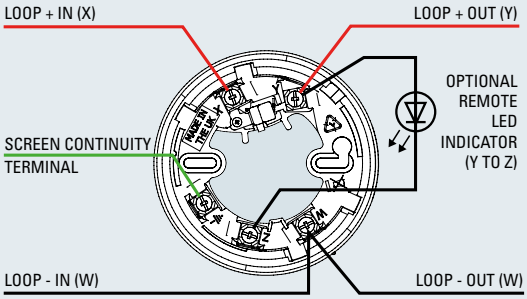

Technical Specification:

Environment	-10˚C to +50˚C (95% R.H. non condensing)
Ingress Protection	IP41
Weight (excluding base)	105g
Loop Powered	Yes
Loop Standby Load	0.4mA
Loop Alarm Load	8.4mA (10.4mA with Bell Sound)
Loop Voltage	18 - 28V
Isolator	Yes
Sounder Volume	85dB(A) (High), 75dB(A) (Mid), 65dB(A) (Low) *(measured at one metre)*
Device Protocol	Algo-Tec™ 6000*PLUS*
Relevant Standard	NZS 4512

FAST™ Addressing

FAST™ (Firmware Addressed Secure Technology). Each Algo-Tec™ 6000 device is manufactured with a unique serial number factory programmed (firmware embedded) and device label. The label includes the serial number on two bar-coded segments, two of which are removable by the installer (one is a spare). The label is attached to an address location booklet, which is handed to the engineer prior to commissioning. During commissioning the engineer scans the address location booklet to download the loop, address and serial number details. The downloaded data is then checked and stored within the secure non-volatile memory of the control panel and the addressing is complete. FAST™ and easy eliminating troublesome and time consuming setting of address cards and DIL switches. FAST™ addressing is more secure than 'SOFT ADDRESSING' and easier to extend or amend, allowing greater flexibility and reduced costs.

RVAV™

RVAV™ (Remote Visual Address Verification). Once the system has been FAST™ addressed the correct location of each Algo-Tec™ device can be easily identified, using the device's in-built LED to indicate the device address number. The LED has a simple coded pulse, making it quick and easy to count. Because the control panel sends the RVAV™ signal to each device, the RVAV™ walk test is confirming that the devices are correctly addressed and correctly communicating. As-fitted Drawings and device labels can also be checked during RVAV™ walk test, without the disruption of activating devices commonly associated with other types of system.

Talking Sounder Message Set

Please refer to MED2033 Talking Sounder Table.

BASE Options:

6000*PLUS*/BASE
- Low profile common mounting base

6000*PLUS*/FFBASE
- Fast fixing semi recessed base

Note - base options above are included in the product approval.

Company Policy is one of continuous improvement, we reserve the right to change specification without prior notice

Protec Fire Detection Pty Ltd, Unit G11, 50 Carrington Road, Castle Hill, NSW 2154, Australia

© 2021 Protec Fire Detection Pty Ltd

Tel: +61 (0) 2 9052 1569 Web: www.protec.co.uk Email: auzsales@protec.auz.net